AgEcon SEARCH
RESEARCH IN AGRICULTURAL & APPLIED ECONOMICS

The World's Largest Open Access Agricultural & Applied Economics Digital Library

This document is discoverable and free to researchers across the globe due to the work of AgEcon Search.

Help ensure our sustainability.

Give to AgEcon Search

AgEcon Search
http://ageconsearch.umn.edu
aesearch@umn.edu

*Papers downloaded from **AgEcon Search** may be used for non-commercial purposes and personal study only. No other use, including posting to another Internet site, is permitted without permission from the copyright owner (not AgEcon Search), or as allowed under the provisions of Fair Use, U.S. Copyright Act, Title 17 U.S.C.*

THE FUTURE OF AGRICULTURE

Technology, Policies and Adjustment

PAPERS AND REPORTS

FIFTEENTH
INTERNATIONAL CONFERENCE
OF AGRICULTURAL ECONOMISTS

Held at Parque Anhembi
São Paulo, Brazil

19–30 AUGUST 1973

OXFORD
AGRICULTURAL ECONOMICS INSTITUTE
FOR
INTERNATIONAL ASSOCIATION OF AGRICULTURAL
ECONOMISTS
1974

SPECIAL GROUP G

Chairman: S. I. Friedman *Opener*: Alvin C. Egbert, I.B.R.D.
Rapporteur: J. Scully, Ireland

---

*Planning a Progressive Agricultural Infrastructure**

D. K. Desai
Centre for Management in Agriculture, Indian Institute of Management, Ahmedabad

1. THE CONCEPT OF AGRICULTURAL SYSTEM

THE agricultural system includes four fundamental components of a modern agriculture as defined by Mosher, viz., (*a*) farming, (*b*) commercial agri-support activities, (*c*) non-commercial agri-support activities, and (*d*) agri-millieu.[1] This concept is somewhat similar to agri-business[2] except that the latter includes mostly commercial activities.

2. DEFINITION OF THE AGRICULTURAL INFRASTRUCTURE

In developing countries, the agricultural production sub-system (APS) is at the centre of the total agricultural system. It contributes the largest share in the total value generated by the agricultural system. This share, however, decreases as the agricultural system develops because sub-systems other than the APS become more important. All sub-systems other than APS form together the agricultural infrastructure.

3. RELATIONSHIP OF THE AGRICULTURAL INFRASTRUCTURE WITH THE AGRI-PRODUCTION SUB-SYSTEM

As agriculture advances the inter-sectoral input–output flow grows larger. The most modern agriculture is a 'hybrid' agriculture which is a joint venture of agriculture and industry.[3]

The agri-production sub-system (APS) deals with resource use, production, and disposal of farm produce at the farm level. The development of the agricultural supply sub-system (ASS), which supplies all non-farm inputs to the APS, is important for the development of the agricultural infrastructure. The agri-credit sub-system (ACS) makes it

* The author is grateful to Hari Prakash, Research Associate, Indian Institute of Management, Ahmedabad, for his valuable help in the preparation of this paper.

possible for APS to purchase inputs from ASS. The agri-extension sub-system (AES) disseminates knowledge to the APS about the use of inputs, which it acquires from agri-research (ARS) and agri-education sub-systems (AEdS). The AEdS creates researchers for ARS; executives for agri-supply (ASS), agri-processing (APS), and agri-distribution (ADS) sub-systems, and extension workers for AES. The AEdS also imparts knowledge directly to farmers. The ARS is the real innovator and feeds extension, education, processing, and distribution sub-systems.

The agri-processing sub-system (APrS) depends primarily on APS for the procurement of raw materials. It links the agricultural sector with the industrial sector on the one hand and the household sector on the other. The agri-distribution sub-system (ADS) connects consumers with producers and processors. It handles all the pipeline problems. The agri-development sub-system (ADpS) is the most important sub-system and is primarily organized by government and non-commercial organizations. It is related to all other sub-systems and in developing economies is the prime mover of agricultural growth. Its responsibility is also one of social justice. The agri-regulatory system (ARgS) is primarily a government responsibility. However, in many developed economies this function is performed by voluntary organizations such as producers', processors', and distributors' organizations. The functions which various sub-systems perform are depicted in Diagram 1.

4. DEVELOPMENT OF AGRICULTURAL INFRASTRUCTURE (A CASE STUDY)

A case study of Indian Agriculture (an example of agriculture in a developing economy) is narrated to show how development or lack of development of the agricultural infrastructure affects the agricultural system.

4.1 *Agri-production sub-system (APS)*

In India, agriculture, forestry, and fishing contributed 50·1 per cent at current prices and 44·1 per cent at constant prices in 1969–70 to the Net National Product (NNP).[4] The population index increased from 100 in 1960–61 to 124·3 in 1971, whereas the index of agricultural income increased from 100 in 1960–61 to 234·5 in 1970.[5] This growth in agricultural income was primarily due to the growth of foodgrains production, which in turn was due to the development of the agricultural infrastructure.

4.2 *Agri-supply sub-system (ASS)*

Before the 1960s, the only major input which the ASS supplied to APS was water. The management of irrigation sources is under the control of irrigation departments of the government, with the departments of agriculture having very little say in the matter. This has created some problems in the effective utilization of irrigation sources. The Irrigation

AGRICULTURAL SYSTEM

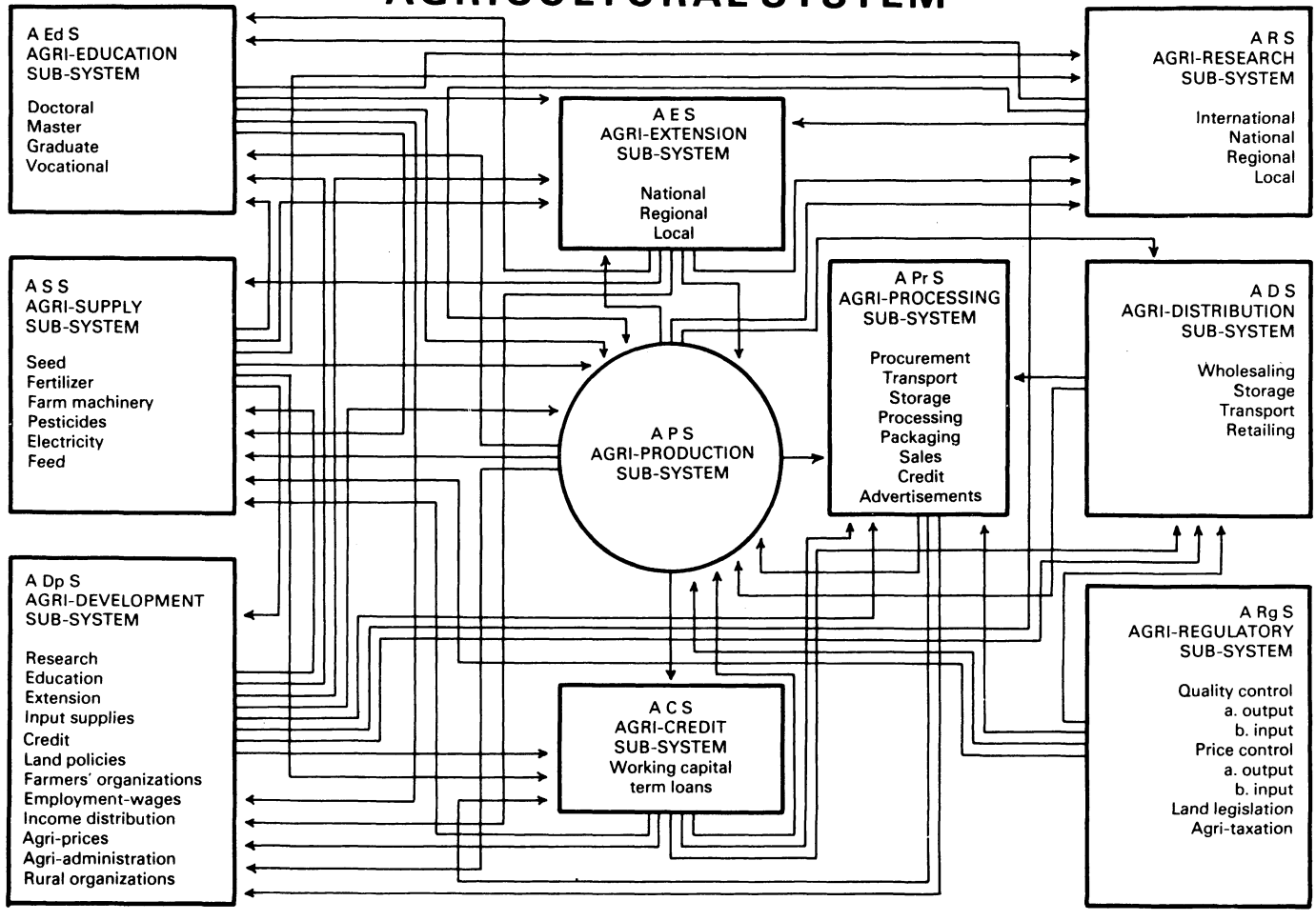

Commission, recently appointed to study these problems, recommended setting up a National Water Resource Council to frame policies and take decisions for the proper utilization of the country's water resources.[6] Minor irrigation is managed by the private sector which increased its share of net irrigated area from 29·6 per cent in 1960–61 to 33·7 per cent in 1967–68; the government share remained at the same level (37·2 per cent) during the decade.[7]

Prior to the 1960s, the use of both fertilizers and plant protection measures was negligible. Production of nitrogenous fertilizers in 1951 was only 11,000 tons of nitrogen. In 1970–71, it rose to 850,000 tons which is yet far short of the total demand estimated at two million tons of N.[8] This gap between supply and demand had its impact on APS. The National Commission on Agriculture made a number of recommendations to solve the difficulties of inadequate supply of fertilizers and suggested promotional measures to increase fertilizer use.[9] In 1970, the use of pesticides per acre varied from Rs. 2.40 to Rs. 27.00 in different parts of the country.[10] This production of pesticides increased from 9108 tons in 1960 to 59,914 tons in 1970. The utilization of capacity, however, decreased from 82 per cent in 1961 to 43 per cent in 1970 which reveals the need to promote pesticide consumption.[11]

Seed was until recently a non-purchased input. The situation changed in 1966 after the introduction of the High Yielding Varieties Programme (HYVP). The government set up the National Seeds Corporation to function as a promotional agency and as an agency for the production of foundation and certified seeds. Studies on the assessment of the requirement of improved seeds indicate that the seed supply of wheat, rice, jowar, bajra, and maize will have to grow nearly three-fold within the next 10 years.[12]

Development of agricultural machinery in India is a recent phenomenon. Iron ploughs were the only improved implements in Indian agriculture at the beginning of the century. In 1970, iron ploughs, seed drills, oil engines and pumps, electric pumps, and tractors formed the important items of agricultural machinery. Engine-driven and electrically operated pumps averaged at 32 per thousand hectares of irrigated area in 1966–67.[13] Tractors which numbered nearly 54,000 averaged at 0·39 per 1000 hectares of net sown area.[14] This is far below the averages of many developed countries.

Animal husbandry is an important part of Indian agriculture. Until recently, except for some veterinary medicines, there were hardly any purchased inputs in livestock production. Due to the efforts of the organized dairy sector, cattle feed factories are being established and cattle and poultry feeds are becoming important purchased inputs.

4.3 *Agri-credit sub-system (ACS)*

Agricultural credit supplied through the institutional structure aimed at protecting farmers from the usurious practices of money-lenders. Until 1967–68, the government policy was to supply agricultural credit through

the co-operative sector alone. However, because of the inability of the co-operative sector to provide adequate credit,[15] commercial banks were directed to provide credit to agriculture on a priority basis.[16]

4.4 *Agri-extension system (AES)*

In the early 1950s, the Agricultural Extension Programme, a not very well-organized programme, was de-emphasized and the Community Development Programme (CDP) was started to bring about a change in the outlook of the rural people which it was assumed would help increase agricultural production. The programme, however, failed to achieve its objectives.[17] As a result, the Intensive Agricultural District Programme (IADP) was initiated in 1960 and introduced in 15 districts to demonstrate how to increase foodgrain productivity rapidly.[18] It did not achieve a significant increase in agricultural production over the normal programme in other adjoining districts.[19]

In 1966–67, a breakthrough in yields of foodgrains was achieved by the ARS. The success of the new strategy—High Yielding Varieties Programme (HYVP)[20]—was such that it was christened the green revolution. Imports for meeting the requirements of major cereals were substantially reduced from 10·36 million tons in 1966 to 3·63 million tons in 1970.[21]

Although the HYVP solved the major problem of food deficit, it drew attention to new problems such as regional imbalances in growth, income disparities, relative neglect of dry farming areas, and modernization of storage, transport, and processing facilities. After 1970, new programmes were started to solve some of these problems.[22]

4.5 *Agri-research sub-system (ARS)*

Until recently, the ARS was very weak. After independence, as a result of the recommendations of some expert committees, a central organization, the Indian Council of Agricultural Research (ICAR), was given the responsibility of directing and helping agricultural research in the country.[23] All the national and regional research institutes were reorganized and given more freedom. Co-ordinated research projects were introduced with a view to co-ordinating different aspects of research and the efforts of various research stations.

A recent development in agricultural research showed that a major breakthrough could be achieved by evolving fertilizer responsive and short duration varieties. Spectacular success has been achieved in wheat production. For rice, the problems of water management and pest control have yet to be solved. Increasing attention is being paid to the problems of evolving suitable crops and practices for dry farming areas.

4.6 *Agri-education sub-system (AEdS)*

Until the end of the third plan, education was one of the key weaknesses in the Indian agricultural development programme.[24] In 1954–55, there were only 24 agricultural colleges with an intake capacity of 1454

students. The number of colleges increased to 73 in 1968–69 with an intake capacity of 8542 students.[25] The basic infrastructure for agricultural education is created. Since 1960, 18 agricultural universities have been set up and post-graduate and Ph.D courses started in them as well as in other organizations. The best students are not yet attracted to agricultural institutions because even though conditions have begun to change for the better, the relative salary structure for agricultural jobs has not yet effectively improved.

4.7 *Agri-processing sub-system (APrS)*

In India, the level of utilization of many products by the agro-processing industry is far behind the corresponding utilization in many advanced countries. For example, only about 0·5 per cent of the total production of fruits and vegetables was utilized by the processing industry in India as compared with 42 per cent in U.S.A.[26] The food processing industry in India has not kept pace with industrial development mainly because of the inadequate supply of raw material of the right quality. Its share declined from 20·7 per cent in 1960 to 16·5 per cent in 1965.[27] The modernization of APrS is an urgent necessity. Sixty per cent of India's marketable surplus of paddy is milled by hullers. Due to the inefficiency of this process rice valued at Rs. 152 crores is lost every year.[28]

4.8 *Agri-distribution sub-system (ADS)*

The traditional distribution system for agricultural products is in the hands of the private sector. The common belief is that the private distribution system is exploitative and anti-social and hence the remedy is to nationalize this system. Several studies, however, have indicated that the private distribution system is highly competitive and the spread between the consumer and producer price can be largely explained by marketing costs.[29] The lack of transport, restrictions on movement of foodgrains, inadequate storage space, and loss in storage due to insects and rats have resulted in low prices to producers, poor margins for the distribution system, and high prices to consumers.

The fact, however, remains that food prices in particular are relatively high for the weaker sections of the society. To protect them, the government has established a public distribution system through a chain of fair price shops. Today, the number of fair price shops is 165,000, which works out to one fair price shop for every four villages.[30]

The government has appointed the Agricultural Prices Commission (APC) to advise on the agricultural price policy and the price structure.[31] The basic strategy of APC is to evolve a balanced and integrated price structure and to fix a range of prices with a minimum support price which is production-oriented and has an element of incentive in it and a maximum price which can be tolerated by consumers.

4.9 *Agri-development sub-system (ADpS)*

In the development strategies for agriculture two streams of thought

have flowed simultaneously—one stressing institutional reform and the other improvement of technology. In the early 1950s, greater emphasis was laid on institutional reforms, particularly land reforms. In the 1960s, the emphasis shifted to the improvement of technology. In the 1970s, the wisdom of emphasizing technological improvements is being questioned as this may aggravate the problem of disparities of income. Many empirical studies have shown that people with resource endowments, particularly large farmers, took advantage of the new technology and increased their income, but at the same time, the income of small farmers also increased. A substantial share of the increased income of large farms went to agricultural labourers.[32]

India is a sub-continent with large regional variations. The problems of regional variability and hence the necessity of decentralization is greater for agriculture than any other economic activity. Thus it is with great wisdom that the Indian Constitution stipulates agriculture as a subject for the states, thereby determining, at least in theory, that agricultural policy shall be developed and executed at the state level.[33] The Panchayati Raj strategy has advocated decentralized decision making up to the district level. In practice, this experiment has met with partial success.[34] Often, suggestions of the central government were converted into fiats by state governments which, though communicated to the district agencies as guidelines, were meant to be followed as fiats.[35] The important principle of local initiative in the decentralization strategy is not followed in practice. Centrally sponsored programmes are given priority even if they are not relevant in local situations. As a result the development organization has made a low impact. Agricultural advance in India owes more to investment than to organization or propaganda or literacy or community development.[36]

The tasks before the development organization at the district or even at the block and village levels are such that they call for large technical and financial resources which the government has, and flexibility in local decision which an autonomous local agency can achieve but which government rules and regulations do not permit. Answers have yet to be found on how to bring about the union between government resources and flexibility of management.

4.10 *Agri-regulatory sub-system (ARgS)*

The major functions of ARgS are (*a*) quality and quantity control and (*b*) price control. Several legislative measures are enacted to exercise quality control on agricultural inputs and to prevent adulteration in food items. Control measures are used to divert irrigation from cash crops to food crops. Measures are adopted to undertake community tasks such as contour bunding and water harvesting. A take-over of the wholesale foodgrain business, particularly of wheat and rice is being forced by the government to establish proper distribution. Price controls are adopted for inputs and foodgrains to make them available to the poor.

5. PLANNING A PROGRESSIVE AGRICULTURAL INFRASTRUCTURE

The Indian experience shows that the development of the infrastructure for progressive agriculture is a very complex problem and encompasses almost the whole economy of the developing nation. The role of the government in improving the whole system or any sub-system is vital. Depending on the local situation and the stage of development, the government can choose to stress the development of a particular sub-system, a mixture of sub-systems, or all the sub-systems simultaneously. Investment in these alternatives has to be consciously planned.

The Indian experience tells us that if research and education sub-systems were well developed before the 1960s, AES would have paid dividends instead of failing. The lack of emphasis on ASS in the 1960s resulted in the short supply of agricultural inputs. The short supply of key agricultural inputs such as fertilizers in turn hampered the growth of agricultural production. Due to the inadequate supply of raw materials from APS, APrS could not be modernized. Again controls on ADS hampered the modernization of agri-processing and agri-production sub-systems.

The agri-development sub-system, the key sub-system, should play the role of a facilitator rather than that of a controller. Often, material and financial resources are not the bottlenecks in the development of a progressive agricultural infrastructure. The major bottleneck seems to be the paucity of development-minded men to guide the policies and programmes of agricultural development. It is possible to augment this important resource by adopting proper strategies for agricultural research, education, and training and providing proper incentives through monetary and non-monetary rewards. The trained and highly motivated man-power can plan and execute programmes for developing the agricultural infrastructure which will modernize the whole agricultural system in developing agricultural economies.

REFERENCES

1. Mosher, A. T. (1971) *To create a modern agriculture* (New York: Agricultural Development Council, Inc.), pp. 5–6.
2. Davis, John H. and Ray A. Goldberg (1957) *A concept of agribusiness*, (Boston), p. 70.
3. Borton, Raymond E. (1966) *Getting agriculture moving* (New York: Agricultural Development Council, Inc.), p. 24.
4. Directorate of Economics and Statistics, Ministry of Agriculture, Government of India (1971) *Indian agriculture in brief* (11th edn; New Delhi: Manager, Publications Division), p. 8.
5. Ibid., p. 10.
6. Ministry of Irrigation and Power, Government of India (1972) *Report of the Irrigation Commission*, Vol. 1 (Delhi: the Manager of Publications), p. 290.
7. Directorate of Economics and Statistics, Ministry of Agriculture, Government of India, op. cit., p. 31.
8. Ibid., pp. 161–4.
9. National Commission on Agriculture, Government of India (1971) *Interim report on fertilizer distribution*, pp. 21–40 (mimeographed).

10. Desai, D. K. (1972) 'Pattern of pesticide users in India', *Participant Journal,* Vol. VI, No. 9.
11. *Financing Agriculture* (1971) Agricultural Finance Corporation, Vol. III, No. 3, p. 52.
12. Asopa, V. N. and D. K. Desai (1973) *Assessment of the requirements of high yielding seeds and the development of seed industry* (Ahmedabad: Centre for Management in Agriculture, Indian Institute of Management, p. 62.
13. Directorate of Economics and Statistics, Ministry of Agriculture, Government of India, op. cit., p. 40.
14. Ibid., p. 40.
15. Jha, L. K. (1971) Inaugural Address at a Seminar on Financing of Agriculture by Commercial Banks, December 6–8, 1968 (Bombay: Reserve Bank of India), p. 3.
16. Government of India (1972) *Report of the Banking Commission,* (Delhi: Manager, Publications Division), pp. 37–40.
17. Mellor, John W. *et al.* (1968) *Developing rural India, plan and practice* (Ithaca: Cornell Univ. Press), p. 35.
18. Brown, Dorris D. (1971) *Agricultural development in India's districts* (Cambridge: Harvard University Press), p. 1.
19. Desai, D. K. (1969) 'Intensive agricultural district programme—analysis of results', *Economic and Political Weekly,* IV, 26.
20. Desai, D. K. and D. A. Patel (1967) *Planning and implementation in agriculture, studies of high yielding varieties programme. Hybrid Bajra* in Gujarat State (Ahmedabad: Faculty for Management in Agriculture and Co-operatives, Indian Institute of Management), p. 1.
21. Subramaniam, C. (1973) 'Problems of changing agriculture', *New opportunities in changing agriculture* (Ahmedabad: Centre for Management in Agriculture, Indian Institute of Management); also see, Directorate of Economics and Statistics, Ministry of Agriculture, Government of India, op. cit., p. 106.
22. Seminar on Rural Development for Weaker Sections, 1–3 October 1972, organized by Indian Society of Agricultural Economics, Bombay and Centre for Management in Agriculture, Indian Institute of Management, Ahmedabad (unpublished).
23. Chowdhry, Kamla, V. R. Gaikwad, and S. K. Bhattacharyya (1972) *An organizational study of the Indian Council of Agricultural Research* (Ahmedabad: Centre for Management in Agriculture, Indian Institute of Management).
24. Mellor, John. W. *et al.,* op. cit., p. 116.
25. Directorate of Economics and Statistics, Ministry of Agriculture, Government of India, op. cit., p. 201.
26. George, P. S. 'Opportunities in Food Processing', *New opportunities in Indian agriculture,* op. cit., pp. 93–4.
27. Ibid., pp. 91–2.
28. Gupta, V. K. (1970) 'Modernization of rice mills', *National Food Congress,* Government of India.
29. Mellor, John W. *et al.,* op. cit., pp. 327–94. Also see Chauhan, K. K. S. and R. V. Singh, *Marketing of wheat in Rajasthan* (mimeographed).
30. *Financial Express* (27 March 1973) India.
31. Dantwala, M. L. (30 Dec. 1969) 'Principles and problems of agricultural prices determination', Presidential Address to 19th Annual Conference of Indian Society of Agricultural Statistics.
32. Desai, D. K. (1970) Rapporteur's Report on 'Pattern of income distribution, saving and expenditure in rural areas', *Indian Journal of Agricultural Economics.*
33. Mellor, John W. *et al.,* op. cit., p. 130.
34. Gaikwad, V. R. (1969) *Panchayati Raj and bureaucracy* (Hyderabad: National Institute of Community Development).
35. Desai, D. K. and D. A. Patel, op. cit., pp. 13–15.
34. Gaikwad, V. R. (1969) *Panchayati Raj and bureaucracy* (Hyderabad: National Institute of Community Development).
35. Desai, D. K. and D. A. Patel, op. cit., pp. 13–15.
36. Hunter, Guy (1970) *The administration of agricultural development—lessons from India* (Bombay: Oxford University Press), p. 130.

SPECIAL GROUP G REPORT

Main points emanating from the discussion

1. Where the inter-relationships between the various sub-systems are depicted in the form of an inter-sectoral input-output matrix the provision of adequate and reliable data for each sector is of vital importance. Intelligent decisions cannot be made in the absence of such data. Consequently, the most important people in the whole process are the data collectors.

2. Risks associated with the introduction of new techniques at farm level are such that if these techniques are to be adopted by the greater proportion of low-income farmers some form of income guarantee should be built into infrastructural design.

3. The infrastructural design should also allow for the transfer of marketing signals back to farm level as rapidly as possible.

4. The Indian experience has shown that a number of informal elements in the existing infrastructural system are already operating efficiently. New systems proposed were so mechanical that the people concerned were not able to accept them. The lesson to be learned in this instance is that, where informal arrangements are satisfactory, they should be preserved as an integral part of any new infrastructural system.

5. In many cases the importation of capital-intensive technology is not suited to the needs of countries like India where labour surpluses exist. Very often the imported technology does not fit the requirements of the local situation. It is necessary to distinguish between technical and economic efficiency in such circumstances. Even the transfer of ideas from other countries for application in developing countries should be regarded initially as no more than a learning process. If these ideas do not work, others should be tried.

6. Efficiency considerations suggest that allowance should be made for the opinions of key people at various levels within the system who are not represented at decision-making level.

7. Collaboration among the various agencies within the infrastructural system is extremely important. So also is the co-ordination of the activities of these agencies. In this respect, the role of administration cannot be over-emphasized. In those developing countries where the administrative system is imposed there is often a separation of responsibility for activities which normally should be closely associated with one another, e.g. animal and crop husbandry. The neglect of animal husbandry in some such countries is at least partly due to this separation.

8. The question often arises as to whether new or existing agencies should have responsibility for programmes of rural integration. It is not possible to make a specific decision in this matter. The use of either set of agencies may have advantages but which set is employed will depend entirely on the circumstances under consideration.

9. Where agencies in a support system operate from a social level near that of those who need this support, there is a situation where recipients

are receiving aid from people who are more or less equal to themselves. In such circumstances they are likely to be more receptive to the aid offered.

10. In the staffing of any particular support system, particular attention should be paid to the ratio of professional, sub-professional and para-professional staff members. This ratio will depend entirely on the exigencies of the given situation. In the development of processing and marketing activities, for example, in situations where such facilities do not already exist, it is more than likely that the main demand will be for people with technical abilities. This demand would be unlikely to arise where processing and marketing comprise no more than marginal activities grafted on to an existing system.

11. Personnel development is critical to the success of any proposed infrastructural system. There is a great need for trained personnel, but, more importantly, there is an even greater need for motivated personnel. In some developing countries rural planning is done by people with urban backgrounds. This fact is subject to much criticism at times. But if rural people are not sufficiently motivated for the purpose they will not do this type of work. Motivation, training and background are extremely important in all situations. The best type of person to perform any particular function depends entirely on the circumstances of each particular situation. So also does the personnel mix—what is right to perform a given function in, say, Taiwan will not be the same as that required to perform a similar function in India or Japan.

Among the participants in the discussion were: S. I. Friedmann, *Mexico/Chile*; S. N. Jodha, *India*; C. Mutriah, *India*; N. W. Wolters, *Belgium*.